Regulator Throttle - 3 Amp

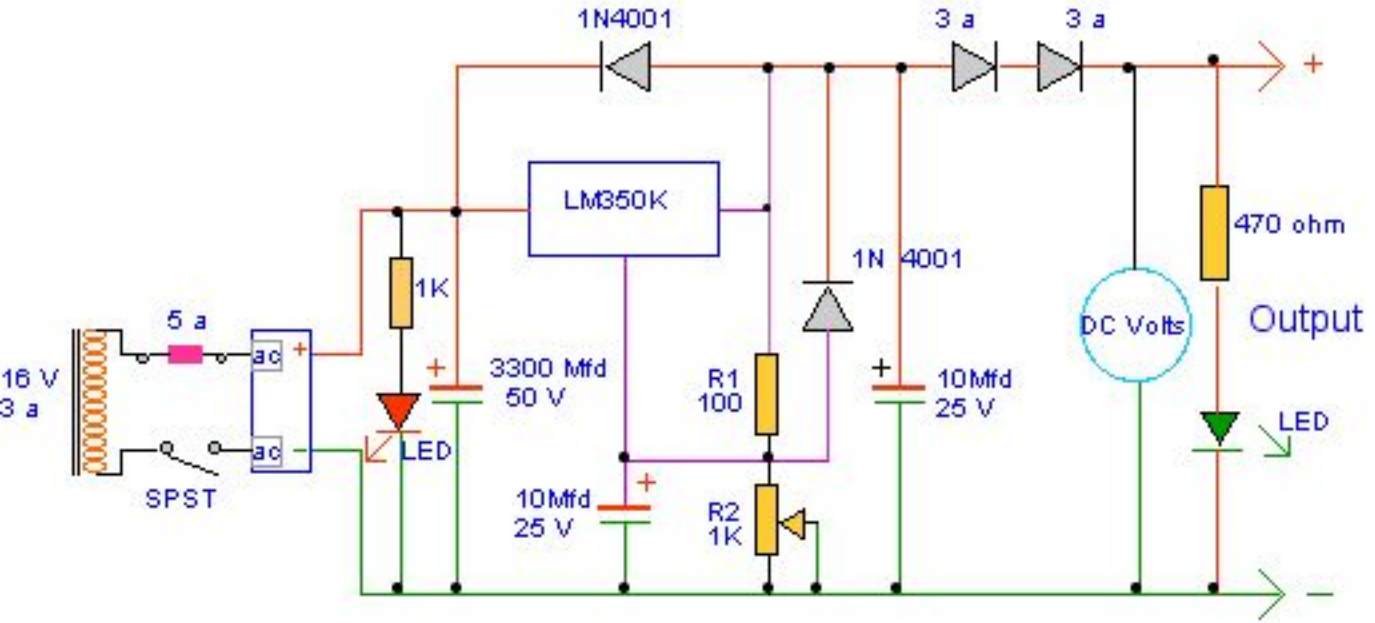

$$Vout = 1.25 \times \left(1 + \frac{R2}{R1}\right)$$

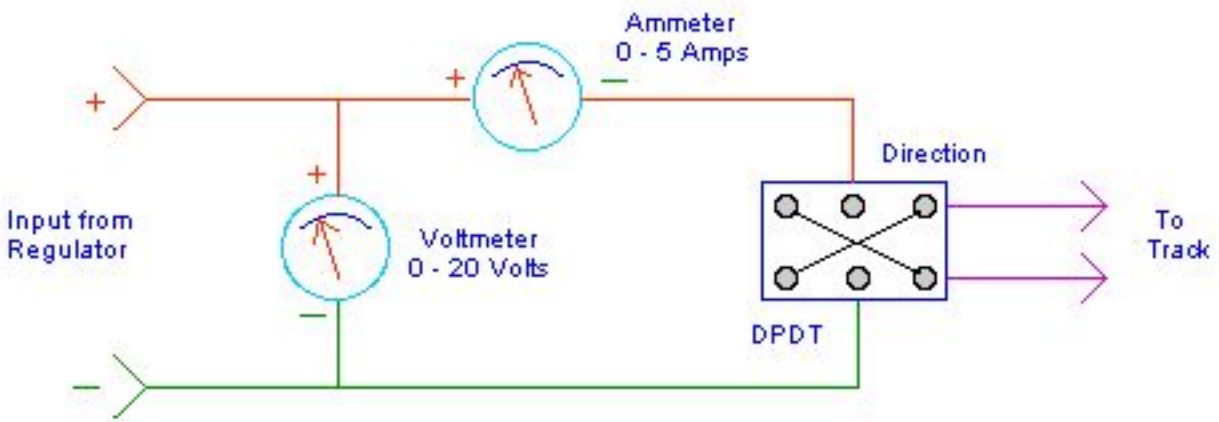

Voltmeter, Ammeter and Direction Switch

Drawn by L. Jones 2002