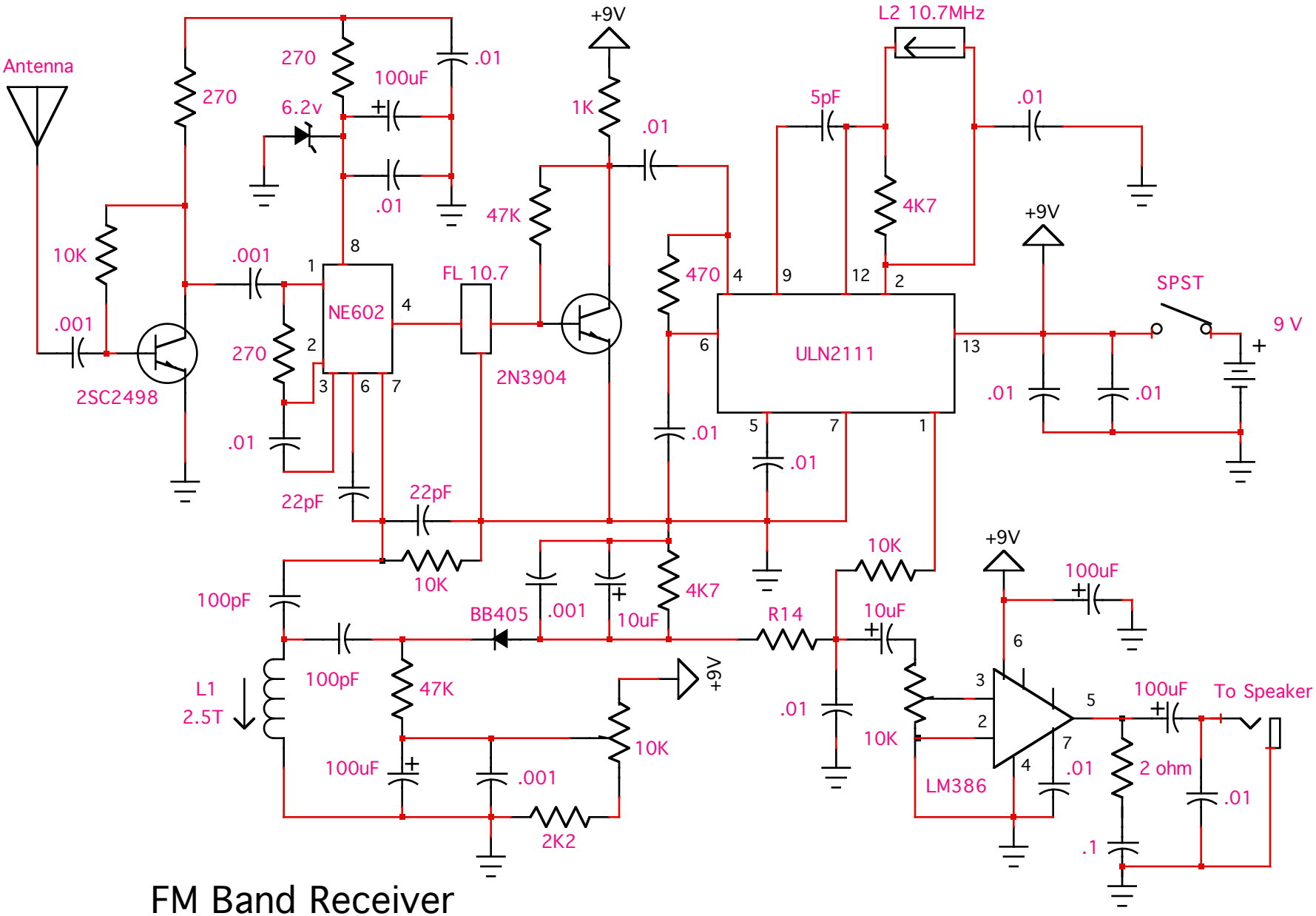

FM Band Receiver

by Ramsey Elect.

Drawing: laj

Note: Some part values are not specified.