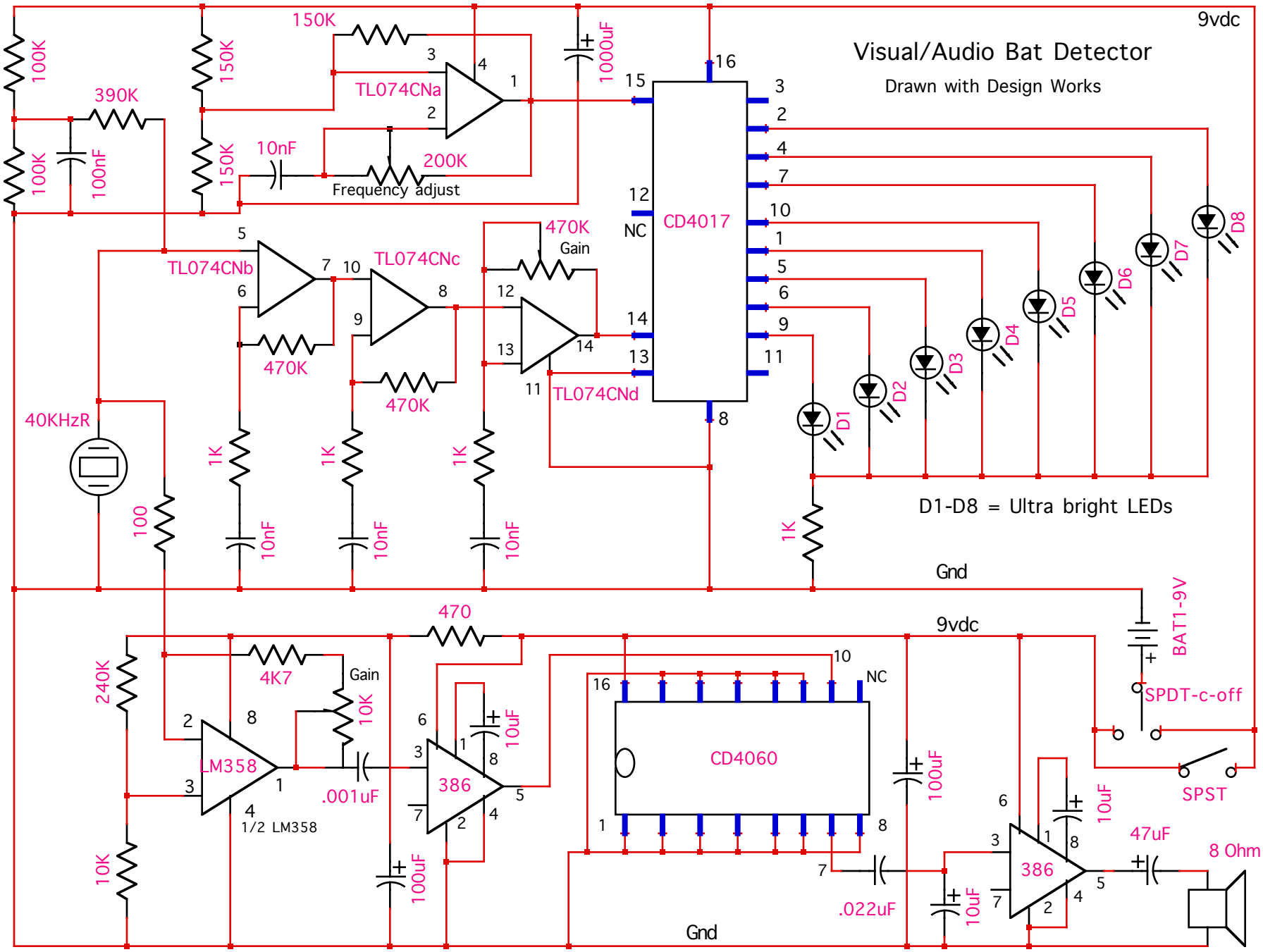

9vdc
Visual/Audio Bat Detector
Drawn with Design Works
150K
TL074CNa
1000uF
100K
390K
150K
100K
100nF
150K
10nF
200K
Frequency adjust
CD4017
NC
470K
Gain
TL074CNb
TL074CNc
470K
470K
TL074CNd
40KHzR
1K
1K
1K
100
10nF
10nF
10nF
D1
D2
D3
D4
D5
D6
D7
D8
1K
D1-D8 = Ultra bright LEDs
Gnd
BAT1-9V
SPDT-c-off
SPST
470
9vdc
240K
4K7
Gain
10K
LM358
1/2 LM358
.001uF
386
10uF
100uF
10K
CD4060
NC
100uF
.022uF
10uF
386
10uF
47uF
8 Ohm
Gnd